Property of Yanmar Marine International (All rights reserved).

DETAIL OF COUPLING (1:5)

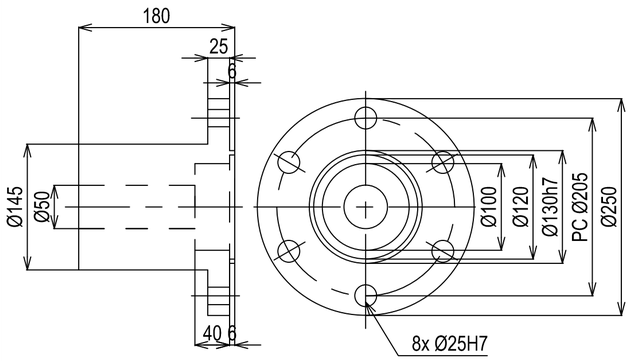

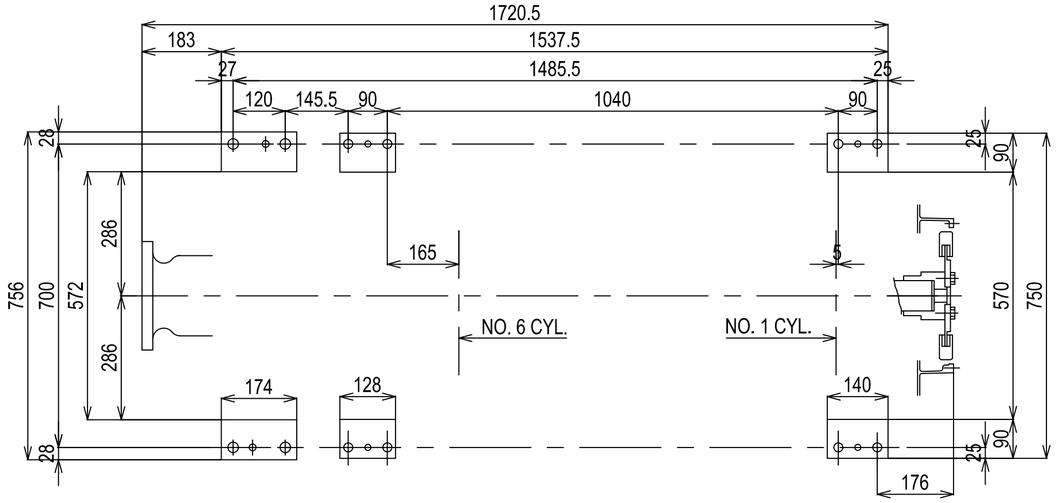

DETAIL OF FRONT PTO

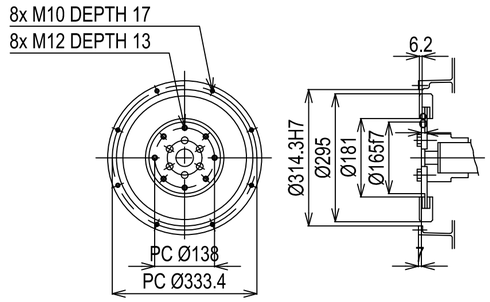

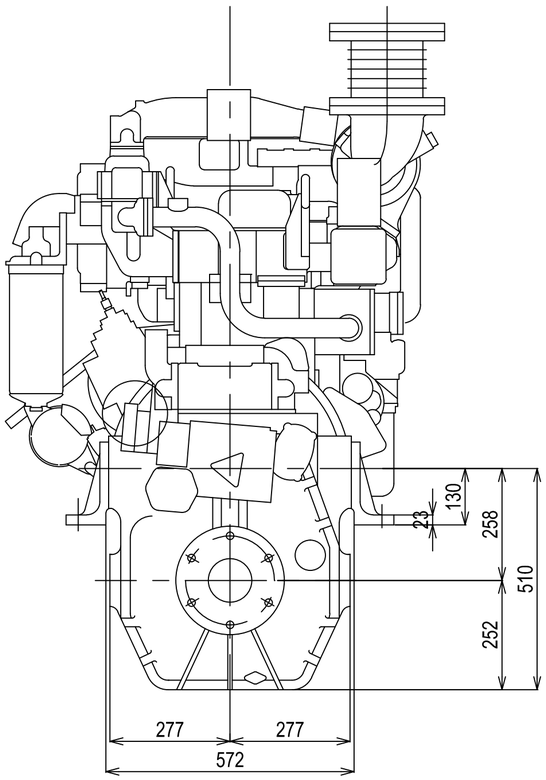

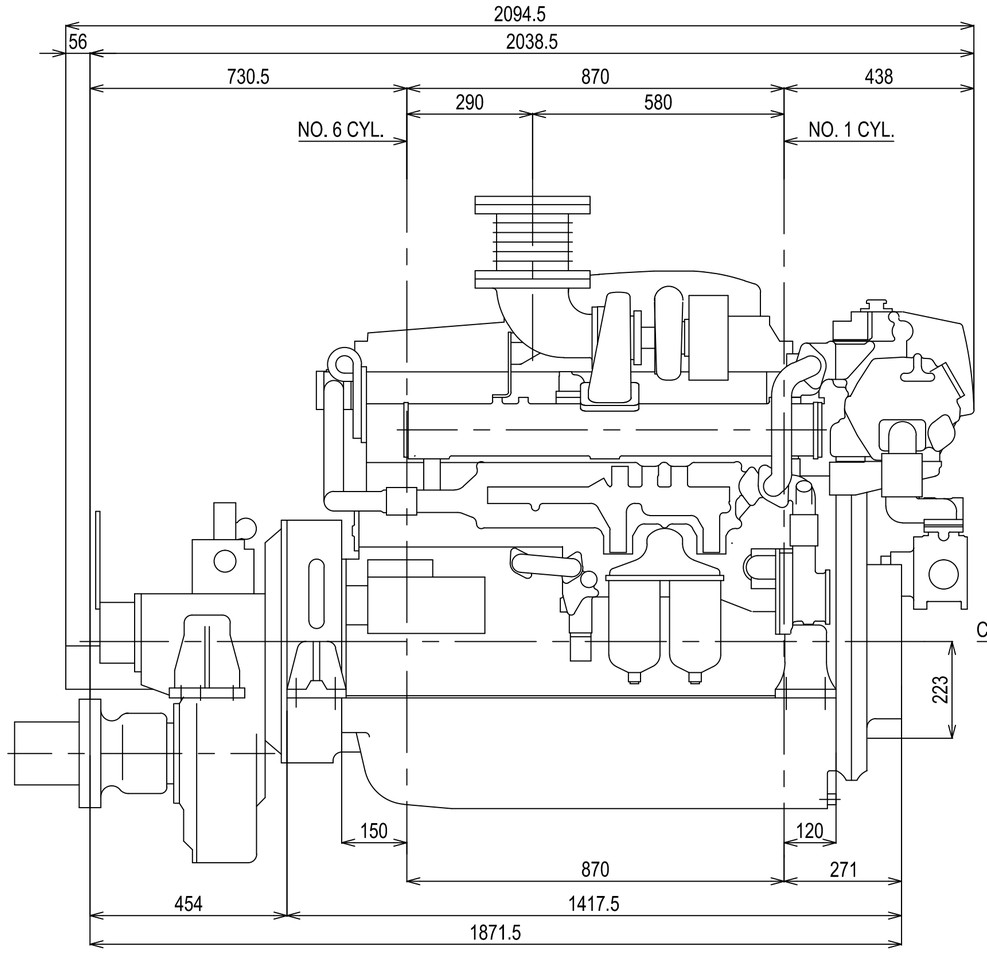

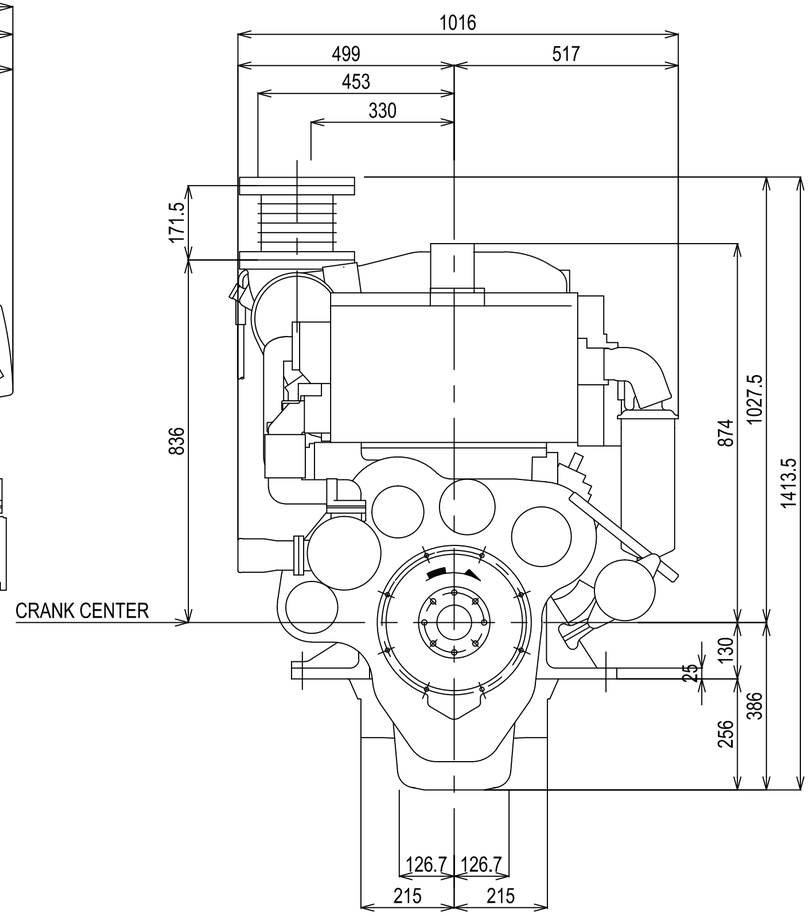

DETAIL OF MOUNTING BLOCK (1:5)

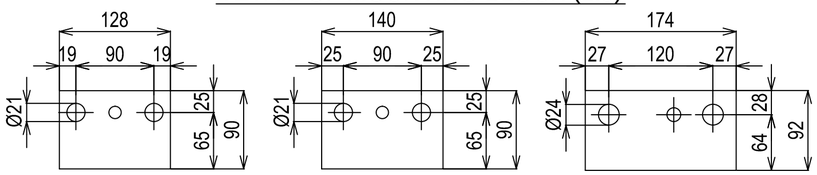

Serie:	HA2	Engine:	6HA2M-WDTxYX-120L	Release:	R2011-1
Scale:	1:10 (1:5)	Date:	01-03-2011	Dimensions:	mm

YANMAR.